DS-2DF6A225X-AEL(T5)
2 MP 25× Network Speed Dome

Hikvision DS-2DF6A225X-AEL(T5) 2MP 25× Network Speed Dome adopts 1/1.8" progressive scan CMOS chip. With the 25× optical zoom lens, the camera offers more details over expansive areas.

This series of cameras can be widely used for wide ranges of high-definition, such as the rivers, forests, roads, railways, airports, ports, squares, parks, scenic spots, stations and large venues, etc.

- 1/1.8" Progressive Scan CMOS
- High quality imaging with 2 MP resolution
- Excellent low-light performance with DarkFighter technology
- 25× optical zoom and 16× digital zoom provide close up views over expansive areas
- Supports rapid focus
- Water and dust resistant (IP67) and vandal proof (IK10)
- Supports face capture to detect, capture, grade, and select faces in motion
- Supports road traffic to detect vehicles

▪ DORI

The DORI (detect, observe, recognize, identify) distance gives the general idea of the camera ability to distinguish persons or objects within its field of view.

It is calculated based on the camera sensor specification and the criteria given by EN 62676-4: 2015.

DORI	Detect	Observe	Recognize	Identify
Definition	25 px/m	63 px/m	125 px/m	250 px/m
Distance (Tele)	2034.5 m (6674.9 ft)	807.3 m (2648.6 ft)	406.9 m (1335.0 ft)	203.4 m (667.3 ft)

▪ Specification

Camera	
Image Sensor	1/1.8" progressive scan CMOS
Min. Illumination	Color: 0.002 Lux @ (F1.5, AGC ON), B/W: 0.0002 Lux @ (F1.5, AGC ON)
Shutter Speed	1/1 s to 1/30,000 s
Slow Shutter	Yes
Day & Night	IR cut filter
Zoom	25x optical, 16x digital
Max. Resolution	1920 × 1080
Lens	
Focus	Semi-auto, manual, auto
Focal Length	5.9 mm to 147.5 mm
Zoom Speed	Approx. 4.8 s
FOV	Horizontal field of view: 59.8° to 3.3° (wide-tele), Vertical field of view: 33.7° to 1.9° (wide-tele), Diagonal field of view: 65° to 3.8° (wide-tele)
Aperture	Max. F1.5
PTZ	
Movement Range (Pan)	360°
Movement Range (Tilt)	-20° to 90° (auto flip)
Pan Speed	Pan speed: configurable from 0.1° to 300°/s; preset speed: 540°/s
Tilt Speed	Tilt speed: configurable from 0.1° to 240°/s, preset speed 400°/s
Proportional Pan	Yes
Presets	300
Patrol Scan	8 patrols, up to 32 presets for each patrol
Pattern Scan	4 pattern scans, record time over 10 minutes for each scan
Power-off Memory	Yes
Park Action	Preset, pattern scan, patrol scan, auto scan, tilt scan, random scan, frame scan, panorama scan
3D Positioning	Yes
PTZ Status Display	Yes
Preset Freezing	Yes
Scheduled Task	Preset, pattern scan, patrol scan, auto scan, tilt scan, random scan, frame scan, panorama scan, dome reboot, dome adjust, aux output

Video	
Main Stream	50 Hz: 25 fps (1920×1080, 1280×960, 1280×720) 60 Hz: 24 fps (1920×1080, 1280×960, 1280×720)
Sub-Stream	50 Hz: 25 fps (704 × 576, 640 × 480, 352 × 288) 60 Hz: 24 fps (704 × 480, 640 × 480, 352 × 240)
Third Stream	50 Hz: 25 fps (1920 × 1080, 1280 × 960, 1280 × 720, 704 × 576, 640 × 480, 352 × 288) 60 Hz: 24 fps (1920 × 1080, 1280 × 960, 1280 × 720, 704 × 480, 640 × 480, 352 × 240)
Video Compression	Main stream: H.265+/H.265/H.264+/H.264 Sub-stream: H.265/H.264/MJPEG Third stream: H.265/H.264/MJPEG
Video Bit Rate	32 Kbps to 16384 Kbps
H.264 Type	Baseline profile, main profile, high profile
H.265 Type	Main profile
Scalable Video Coding (SVC)	H.264 and H.265 encoding
Region of Interest (ROI)	8 fixed regions for each stream
Audio	
Audio Compression	G.711alaw, G.711ulaw, G.722.1, G.726, MP2L2, PCM
Audio Bit Rate	64 Kbps (G.711)/16 Kbps (G.722.1)/16 Kbps (G.726)/32 to 192 Kbps (MP2L2)
Network	
Network Storage	NAS (NFS, SMB/ CIFS), ANR
Protocols	IPv4/IPv6, HTTP, HTTPS, 802.1x, QoS, FTP, SMTP, UPnP, SNMP, DNS, DDNS, NTP, RTSP, RTCP, RTP, TCP/IP, DHCP, PPPoE, UDP, IGMP, ICMP, Bonjour
API	Open-ended API, ISAPI, Hikvision SDK, Third-party management platform, ISUP, Open Network Video Interface (Profile S, Profile G, Profile T)
Simultaneous Live View	Up to 20 channels
User/Host	Up to 32 users. 3 levels: Administrator, Operator and User
Smooth Streaming	Yes
Security	User authentication (ID and PW), Host authentication (MAC address); HTTPS encryption; IEEE 802.1x port-based network access control; IP address filtering
Client	iVMS-4200, Hik-Connect, HikCentral
Web Browser	IE11, Chrome 57.0+, Firefox 52.0+, Safari 11+
Image	
Day/Night Switch	Day, night, auto, scheduled-switch
Image Enhancement	BLC, HLC, 3D DNR
Wide Dynamic Range (WDR)	140 dB WDR
Defog	Optical defog
Image Stabilization	EIS (Built-in gyroscope to improve EIS performance)
Regional Exposure	Yes
Regional Focus	Yes
Privacy Mask	24 programmable polygon privacy masks, mask color or mosaic configurable
SNR	≥ 52 dB
Interface	
Ethernet Interface	1 RJ45 10M/100M self-adaptive Ethernet port
On-board Storage	Built-in memory card slot, support MicroSD/MicroSDHC/MicroSDXC, up to 256 GB; NAS (NFS, SMB/ CIFS), ANR

Alarm	7 alarm inputs, 2 alarm outputs
Audio	1 input (line in), max. input amplitude: 2-2.4 vpp, input impedance: 1 KΩ ± 10%; 1 output (line out), line level, output impedance: 600 Ω
Video Output	1.0V[p-p]/75Ω, PAL, NTSC, BNC connector
RS-485	HIKVISION, Pelco-P, Pelco-D, self-adaptive
Event	
Basic Event	Motion detection, video tampering alarm, alarm input and output, exception
Smart Event	Intrusion detection, line crossing detection, region entrance detection, region exiting detection, unattended baggage detection, object removal detection, vandal-proof alarm, audio exception detection
Smart Tracking	Manual tracking, auto-tracking
Alarm Linkage	Alarm actions, such as Preset, Patrol Scan, Pattern Scan, Memory Card Video Record, Trigger Recording, Notify Surveillance Center, Upload to FTP/Memory Card/NAS, Send Email, etc.
Deep Learning Function	
Face Capture	Support detecting up to 30 faces at the same time. Support detecting, tracking, capturing, grading, selecting of face in motion, and output the best face picture
Perimeter Protection	Line crossing, intrusion, region entrance, region exiting Support alarm triggering by specified target types (human and vehicle)
Road Traffic and Vehicle Detection	
Road Traffic	Support vehicle detection (license plate number,vehicle model, and vehicle color recognition)
General	
General Function	Mirror, password protection, watermark, IP address filter
Power	24 VAC±25% (Max. 45 W, including max. 6 W for heater), Hi-PoE (Max. 50 W, including max. 6 W for heater)
Operating Condition	Temperature: -40°C to 70°C (-40°F to 158°F), Humidity: ≤ 95%
Dimension	⌀ 231.1 mm × 355.6 mm (⌀ 9.10" × 14")
Weight	Approx. 6 kg (13.23 lb.)
Language	33 languages: English, Russian, Estonian, Bulgarian, Hungarian, Greek, German, Italian, Czech, Slovak, French, Polish, Dutch, Portuguese, Spanish, Romanian, Danish, Swedish, Norwegian, Finnish, Croatian, Slovenian, Serbian, Turkish, Korean, Traditional Chinese, Thai, Vietnamese, Japanese, Latvian, Lithuanian, Portuguese (Brazil), Ukrainian
Approval	
EMC	FCC SDoC (47 CFR Part 15, Subpart B); CE-EMC (EN 55032: 2015, EN 61000-3-2: 2019, EN 61000-3-3: 2013+A1:2019, EN 50130-4: 2011 +A1: 2014); RCM (AS/NZS CISPR 32: 2015); IC VoC (ICES-003: Issue 7); KC (KN 32: 2015, KN 35: 2015)
Safety	UL (UL 62368-1) CB (IEC 62368-1:2014+A11); CE-LVD (EN 62368-1:2014+A11:2017), BIS (IS 13252(Part 1):2010/ IEC 60950-1: 2005); LOA (IEC/EN 60950-1)

Environment	CE-RoHS (2011/65/EU); WEEE (2012/19/EU); Reach (Regulation (EC) No 1907/2006)
Protection	Lightning Protection, Surge Protection and Voltage Transient Protection, ±6 kV Line to Gnd, ±3kV Line to Line, IK10 (IEC 62262:2002), IP67 (IEC 60529-2013)

▪ Available Model

DS-2DF6A225X-AEL (T5)

▪ Typical Application

Hikvision products are classified into three levels according to their anti-corrosion performance. Refer to the following description to choose for your using environment.

This model has NO SPECIFIC PROTECTION.

Level	Description
Top-level protection	Hikvision products at this level are equipped for use in areas where professional anti-corrosion protection is a must. Typical application scenarios include coastlines, docks, chemical plants, and more.
Moderate protection	Hikvision products at this level are equipped for use in areas with moderate anti-corrosion demands. Typical application scenarios include coastal areas about 2 kilometers (1.24 miles) away from coastlines, as well as areas affected by acid rain.
No specific protection	Hikvision products at this level are equipped for use in areas where no specific anti-corrosion protection is needed.

▪Dimension

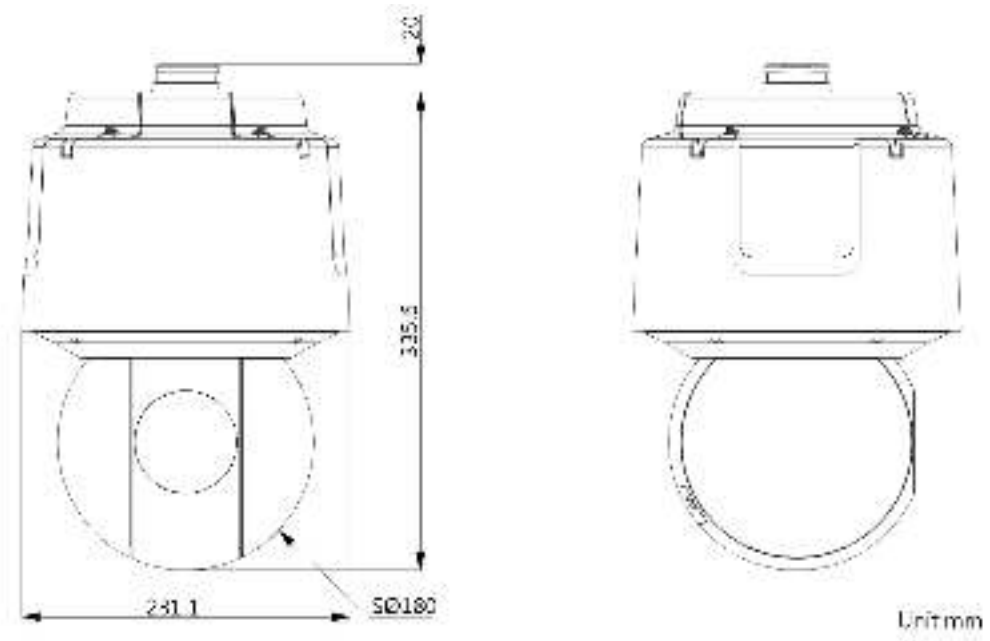

▪ Accessory

▪ Optional

DS-1663ZJ-P In-ceiling mount	DS-1604ZJ-Corner-P Corner mount	DS-1682ZJ-P Pendant Mount	DS-1604ZJ-Pole-P Vertical pole mount	DS-1667ZJ-P Pendant Mount
DS-1673ZJ-P Vertical pole mount	**DS-1604ZJ-BOX-POLE-P Vertical pole mount**	**DS-1662ZJ-P Pendant Mount**		

Distributed by

Headquarters
No.555 Qianmo Road, Binjiang District,
Hangzhou 310051, China
T +86-571-8807-5998
overseasbusiness@hikvision.com

Hikvision USA
T +1-909-895-0400
sales.usa@hikvision.com

Hikvision Europe
T +31-23-5542770
sales.eu@hikvision.com

Hikvision UK & Ireland
T +01908-002140
sales.uk@hikvision.com

Hikvision UAE
T +971-4-4432080
sales.ae@hikvision.com

Hikvision Russia
T +7-495-989-67-89
sales.ru@hikvision.com

Hikvision Australia
T +61-2-8599-4233
sales.au@hikvision.com

Hikvision Italy
T +39-0438-6902
info.it@hikvision.com

Hikvision South Africa
Tel: +27(10)0351177
sales.africa@hikvision.com

Hikvision Singapore
T +65-6696-6718
sg@hikvision.com

Hikvision Korea
T +82-10-3131-7531-8617
sales.korea@hikvision.com

Hikvision India
T +91-22-28469900
sales@pramahikvision.com

Hikvision Brazil
T +55 11 3318-0050
Latam.support@hikvision.com

Hikvision France
T +33(0)1 85 330 450
info.fr@hikvision.com

Hikvision Spain
T +34 91 737 16 55
info.es@hikvision.com

Hikvision Poland
T +48-22-460-01-50
info.pl@hikvision.com

Hikvision Canada
T +1-866-200-6690
sales.canada@hikvision.com

Hikvision Turkey
T +90 (216) 521 7070 - 7074
sales.tr@hikvision.com

Hikvision Kazakhstan
T +7 727 9730667
nikita.panfilov@hikvision.ru

Hikvision Tashkent
T +998-97-1220-9430
sale@hikvision.uz

Hikvision Indonesia
T +62-21-2937759
Sales.indonesia@hikvision.com

Hikvision Thailand
T +662-275-3946
sales.thailand@hikvision.com

Hikvision Malaysia
T +603-7962-2413
sales.my@hikvision.com

Hikvision Vietnam
T +84-974273888
sales.vn@hikvision.com

Hikvision Hong Kong
T +852-2311-1761
info.hk@hikvision.com

Hikvision Colombia
sales.colombia@hikvision.com

© Hikvision Digital Technology Co., Ltd. 2020 | Data subject to change without notice.